Portable laser marking

L-MOOV

SIC MARKING

The mark of quality

SECURE

INTUITIVE

VERSATILE

Portable laser L-MOOV

The laser marking solution that sticks its nose everywhere

The L-MOOV is a safe, portable fiber laser marking machine that can be adapted to bulky and heavy parts. Thanks to its technology, it offers sharp, high-contrast marking of text, logos and 1D/2D codes.

1234 5678 90

logo

Laser source 2 YEARS garantee

L-MOOV shown here with its cart option incorporating all available accessories

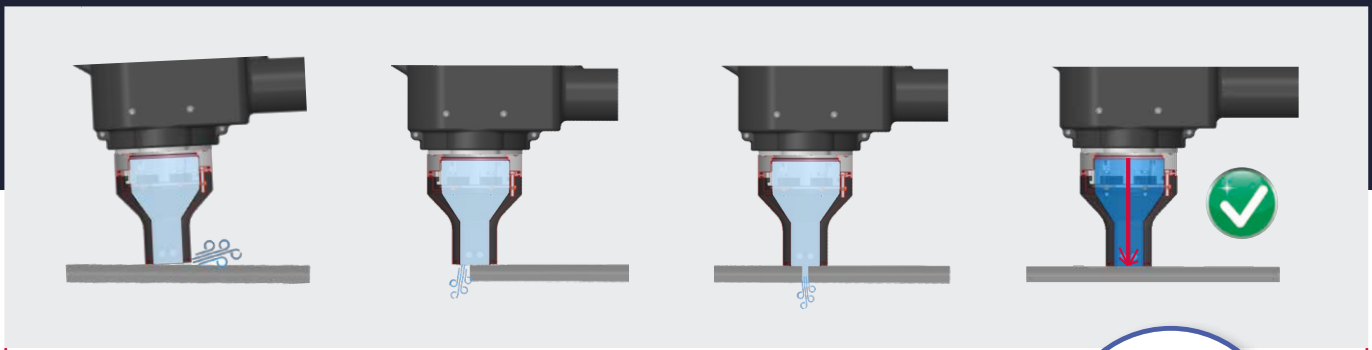

Secure technology

Patent filed

- Certified Class 1 laser system for maximum safety.
- Can be used without safety glasses. protects operator and surrounding personnel.
- Guaranteed safety, even in the event of wrong positioning or pierced part.
- The laser activates only when the nozzle seal is assured (green light on).

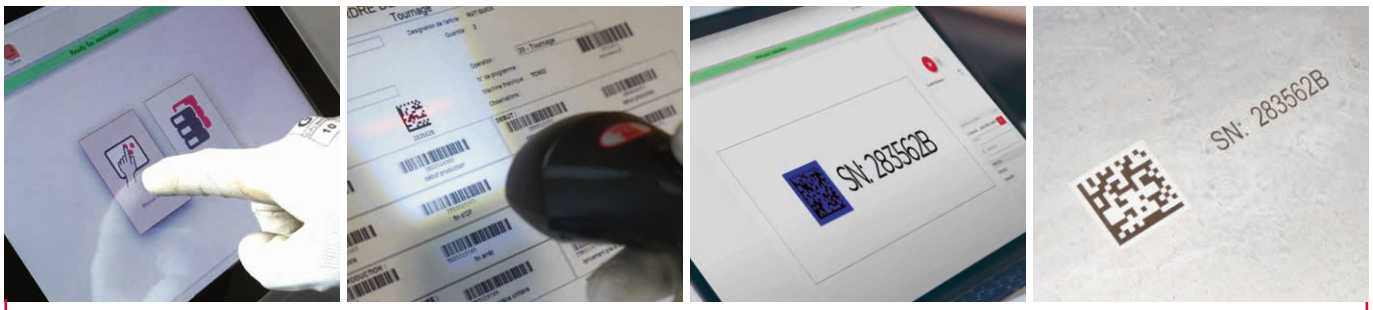

Simple, intuitive operation

Easy & quick

- SIC FACTORY AUTOMATION control software ensures error-free data entry via barcode scanner and can be easily integrated into your production system.
- Simple, effortless set-up.
  Start marking by simply pressing the trigger.
- User-friendly operator mode limiting functionality if desired.
- Automated logging of marked data, with effective control.
- Maintenance-free.

A versatile solution for all types of parts

- Replaces a bulky safety station.
- Easily marks heavy and bulky parts.
- Allows marking of any part geometry thanks to versatile marking nozzles.
  Customized nozzles can be designed on request.

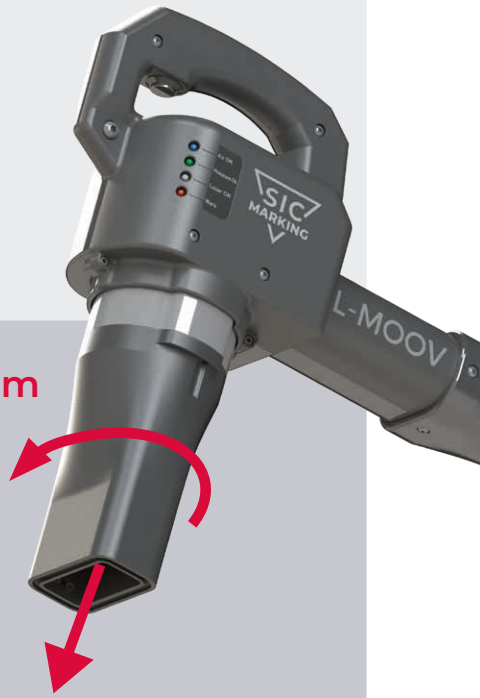

Interchangeable nozzles with quarter-turn system

Available in 80 mm or 150 mm lengths.

25 x 25 mm | 25 x 60 mm | 10 x 60 mm for cylinder Ø 50 | 90 x 90 mm 60 x 60 mm

Options and accessories

Make your choice according to your requirements

Need mobility:

Cart option*

* shown with touch Panel PC accessory

Need to mark small parts:

Secure box option

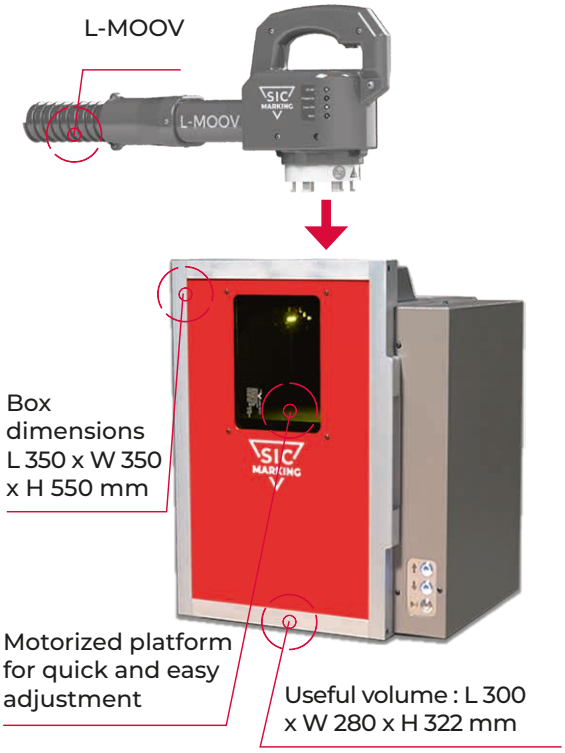

Available accessories:

Panel PC with touch screen

Barcode reader

Suction nozzle & fume extractor

Laser technology	Fiber
Power	20 W / 30 W
Power supply	100-240 V AC
Air supply	3 to 6 bar
Cable length from marking head to controller	2.4 m
Marking head weight	2.5 kg
Total weight controller / head / cable	24 kg
Performance level of PL-e safety devices	PL-e

High-contrast, aesthetic marking

- Precise marking of text and logos even on rough or untreated surfaces.
- Easy, failure-free reading of your QR codes and datamatrix.

The 8 key SIC Marking services

Personalized advice for the best choice of technology

Laser, micro-percussion or scribing? Our experts will help you identify the marking technology best suited for your requirements, thanks to our wide range of solutions.

Customized solutions tailored to your needs

We develop customized products that are perfectly adapted to your industrial processes and requirements.

Feasibility studies and technical tests

We carry out rigorous feasibility studies and tests to validate each stage of your project. Engineering tests are also available.

Complete training for your teams

Our specialists train your teams in the use of your equipment to ensure autonomous and effective control.

Assistance during commissioning

Our local teams are on hand to support you during the commissioning of your machine, facilitating smooth and rapid integration into your day-to-day operations.

Technical support and after-sales service

Responsive after-sales service and dedicated technical support members are at your side for assistance for the supply of spare parts and consumables.

Retrofit solutions for sustainable performance

We offer customized retrofit solutions to extend the life of your machines: backward compatibility with updated components, complete modernization or equipment takeover.

Global support with local expertise

With 10 subsidiaries and a worldwide network of distributors, we offer global resources combined with local support to take charge of your projects from design to installation.

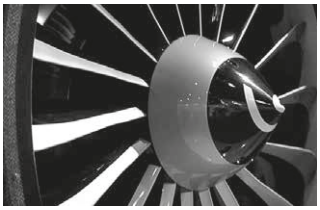

SIC MARKING
The mark of quality

SIC MARKING Limited
Wedgnock Industrial Estate,
Warwick, United Kingdom
+44 19 26 83 03 72

salesuk@sic-marking.com
https://www.sic-marking.co.uk

Art direction, graphic design: gm-design-graphique.com